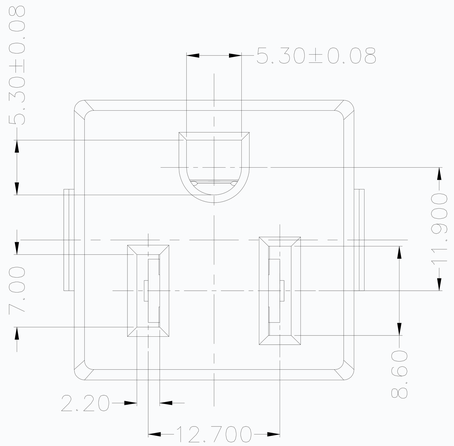

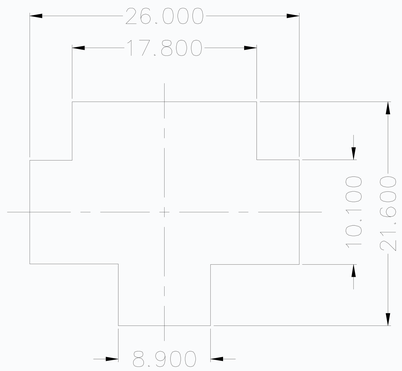

PANEL CUT-OUT
THICKNESS: 1.5mm

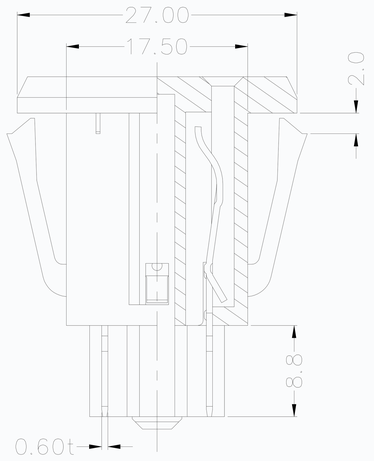

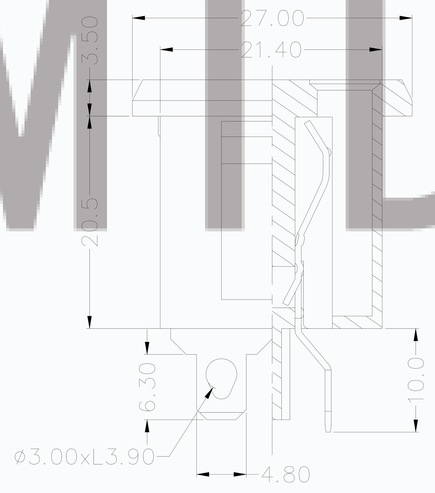

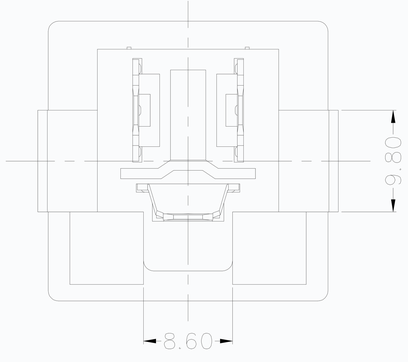

SPECIFICATION

A: MATERIAL:
1.HOUSING: PA(BLACK), UL 94V-0
2.TERMINAL: COPPER ALLOY, TIN PLATED

B: CHARACTERISTICS:
1. RATING: 15A 125V~ UL
2. INSULATION RESISTANCE: 100MΩ MIN, AT 500V DC
3. ELECTRIC STRENGTH: AC 2000V FOR ONE MINUTE

C: APPROVALS:
UL, CUL

CMTDDZ ®

A4			
A3			
A2			
A1			
REV.	DATE	REVISION DESCRIPTION	ISSUE

普通公差
COMMON TOLERANCE :

UP TO 5	±0.20
ABOVE 5 TO 30	±0.30
ABOVE 30	±0.50
ANGULAR	±5°

CMTDDZ 东莞市田都科技有限公司
Dongguan TianDu Technology Co. Ltd.

单 位 UNIT	mm	投 影 PROJECTED		品 名 PRODUCT NAME	Ac Inlet C8型	比 例 SCALE	1:1
绘 图 DRAWN BY		核 对 CHECKED BY		型 号 MODEL NO.			
日 期 DATE	2009.06.21	核 准 APPROVAL BY		图 号 DWG NO.			