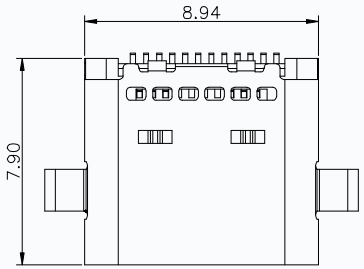

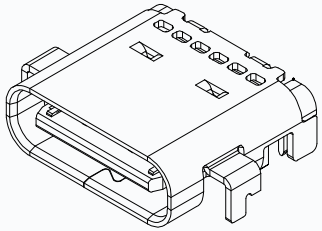

A1	GND	B12	GND
A2	SSTXP1	B11	SSRXP1
A3	SSTXN1	B10	SSRXN1
A4	VBUS	B9	VBUS
A5	CC1	B8	SBU2
A6	DP1	B7	DN2
A7	DN1	B6	DP2
A8	SBU1	B5	CC2
A9	VBUS	B4	VBUS
A10	SSRXN2	B3	SSTXN2
A11	SSRXP2	B2	SSTXP2
A12	GND	B1	GND
PIN	SIGNAL NAME	PIN	SIGNAL NAME

NOTE:
1.MATERIAL:
1.1 INSULATOR: HIGH TEMPERATURE PLASTIC UL 94 V-0;
1.2 CONTACT: COPPER ALLOY
1.3 SHELL:STAINLESS STEEL
2.ELECTRICAL CHARACTERISTICS;
2.1 CONTACT RESISTANCE: 40m Ω Max FOR INITIAL. 10m Ω CHANGE AFTER TEST. MEASURE AT 20mV, 100mA.
2.2 CONTACT CURRENT RATING: 5A FOR V_{BUS} PIN; 1.25A FOR V_{CONN} PIN.
2.3 DIELECTRIC WITHSTANDING VOLTAGE: 100V AC R.M.S.
2.4 INSULATION RESISTANCE 100M Ω Min
2.5 OPERATING TEMPERATURE: - 25°C ~ 85°C
3.MECHANICAL CHARACTERISTICS:
3.1 MATING FORCE: 5~20 N.
3.2 UNMATED FORCE: 8~20 N AFTER TEST
3.3 DURABILITY: 10,000 CYCLES
4.PLATING
4.1 TERMINAL CONTACT: (SEE TAB) GOLD PLATING ALL OVER 50u" Min NICKEL
4.2 SHELL: 50u" Min. NICKEL ALL OVER,

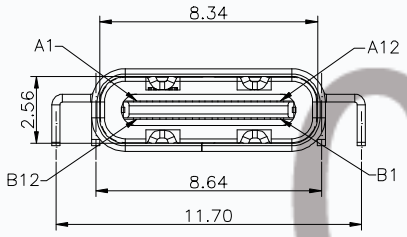

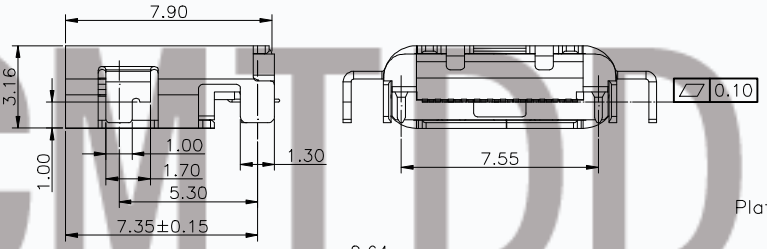

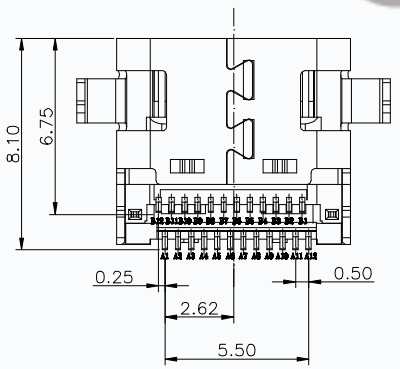

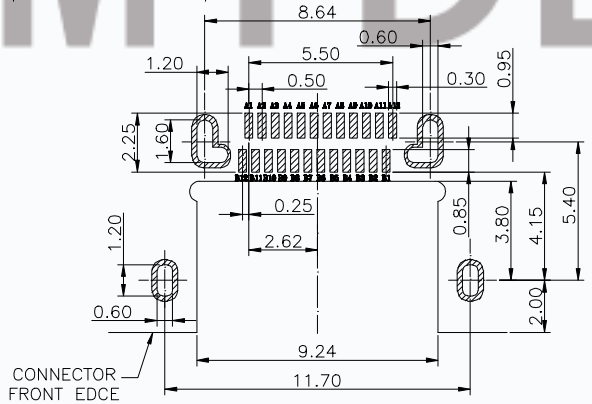

RECOMMENDED P.C.B. LAYOUT
TOLERANCE UNSPECIFIED ±0.05mm

Plating Coding: T11-24CB10-7.9L-GXX/A RZ

A: Plating
G01-Gold Flash in Contact Area/ Gold Flash in Solder Area.
G03-03u" Gold in Contact Area/ Gold Flash in Solder Area.
G05-05u" Gold in Contact Area/ Gold Flash in Solder Area.
G15-15u" Gold in Contact Area/ Gold Flash in Aolder Area.
G30-30u" Gold in Contact Area/ Gold Flash in Solder Area.

CMTDDZ

CMTDDZ 东莞市田都科技有限公司
Dongguan TianDu Technology Co. Ltd.

工程變更通知單號 ECN(DCN) NO.	版次 REV	日期 DATE	說明 DESCRIPTION	改變 CHANGE	承認 APPRO.
	A	2018'/12/28	NEW	ERIC	JEFF

.X ±0.30
.XX ±0.20
.XXX ±0.10
Angle Tolerance
.X° ±1.0°
.XX° ±0.5°
.XXX° ±0.2°

DRAW	繪圖員		
DESIGN	設計	ERIC	2018'/12/28
CHECK	校閱		
APPRO.	承認		

名稱 TITLE: USB 3.1 C TYPE 母座 双排SMT 耳朵 沉板1.0mm 脚距11.7mm

料號 PART NO. T11-24CB10-7.9L

圖號 DWG. NO.

SCALE 1:1 | UNIT:mm | A4 | SHEET: 1 of 1