CMTDDZ 东莞市田都科技有限公司
Dongguan TianDu Technology Co. Ltd.

TYPE-C 3PIN-板上全插DIP

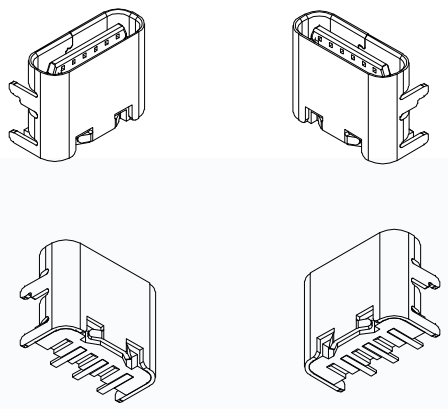

PART SPECIFICATIONS:

1.MATERIAL SPECIFICATION:
- 1.1 HOUSING:HIGH TEMPERATURE RESISTANT PLASTIC,UL94 V-0.
- 1.2 CONTACTS:COPPER ALLOY
- 1.3 SHELL: STAINLESS STEEL

2.PLATING SPECIFICATION:
- 2.1 CONTACTS:
  - Ni 50u" MIN. UNDER PLATED OVER ALL.
  - Au PLATED ON THE FUNCTIONAL AREA OF CONTACT.
  - Sn PLATED ON SOLDER AREA.
- 2.2 FRONT SHELL:
  - Ni 50u" MIN. UNDER PLATED OVER ALL.

3.MECHANICAL PERFORMANCE,
- 3.1 INSERTION FORCE: 0.5kgf~2.0kgf.
- 3.2 REMOVAL FORCE: 0.6kgf~2.0kgf.
- 3.3 DURABILITY: 5000 CYCLES.

4.ELECTRICAL PERFORMANCE
- 4.1 CURRENT RATING: 3.0A
  - VOLTAGE RATING: 5.0V
- 4.2 LLCR:
  - VBUS & GND PINS AND OTHER PINS: 40mΩ/PIN MAX.
  - LLCR MAX. CHANGE OF ALL PINS: 10mΩ.
- 4.3 INSULATION RESISTANCE: 100MΩ MIN
- 4.4 DIELECTRIC WITHSTAND VOLTAGE,AC 100V FOR 1 MINUTE.

5.ENVIRONMENTAL PERFORMANCE:
- OPERATING TEMPERATURE: -25°C~+85°C.

6.IR REFLOW:
- THE PEAK TEMPERATURE ON THE BOARD SHALL BE MAINTAINED FOR 10 SECONDS AT 260°C.

尺寸参数 / PRODUCT DIMENSION

CMTDDZ ®

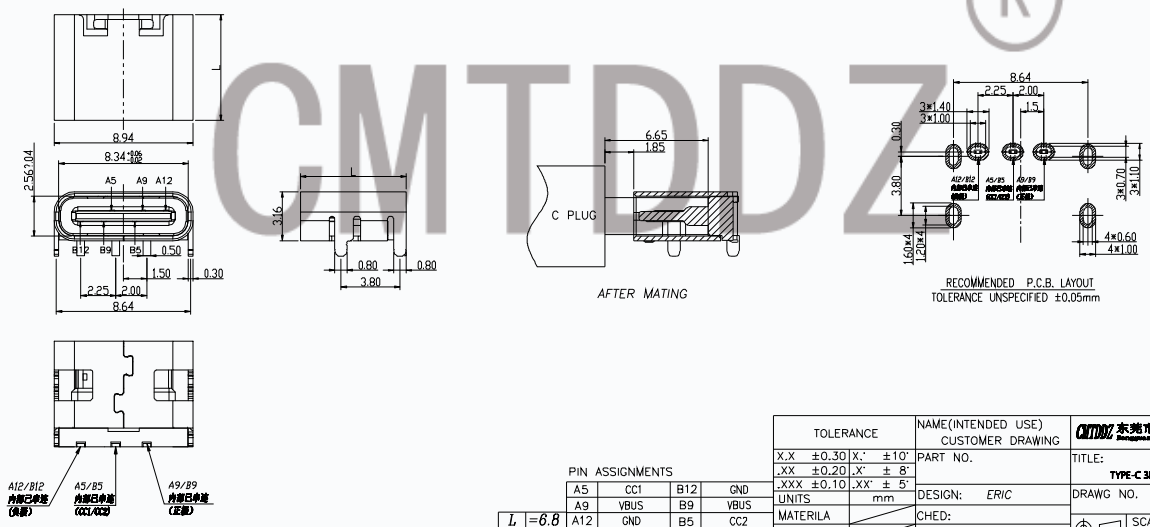

PIN ASSIGNMENTS

	A5	CC1	B12	GND
	A9	VBUS	B9	VBUS
L =6.8	A12	GND	B5	CC2
L =6.5	PIN	SIGNAL NAME	PIN	SIGNAL NAME

TOLERANCE		NAME(INTENDED USE) CUSTOMER DRAWING	CMTDDZ 东莞市田都科技有限公司 Dongguan TianDu Technology Co. Ltd.
X.X ±0.30	X.° ±10°	PART NO.	TITLE: TYPE-C 3PIN-板上全插DIP
.XX ±0.20	.X° ± 8°		
.XXX ±0.10	.XX° ± 5°	DESIGN: ERIC	DRAWG NO.
UNITS	mm	CHED:	SCALE 1:1 / SHEET 1/2 / REV. V0
MATERILA		APPD:	
FINISH			

包装规范 / PACKING SPECIFICATION

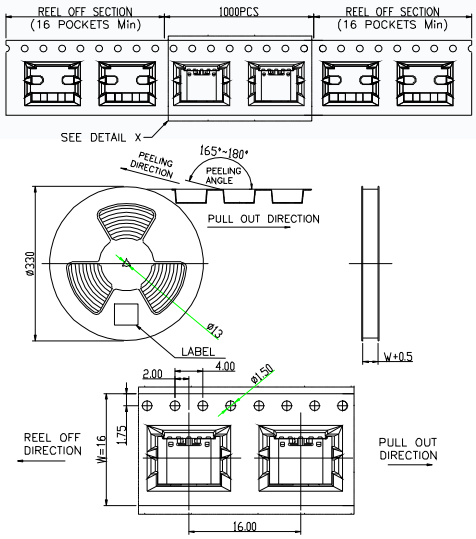

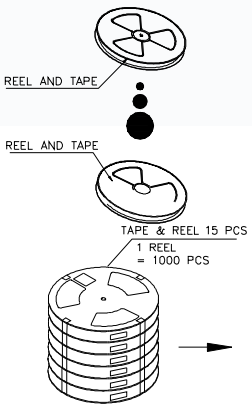

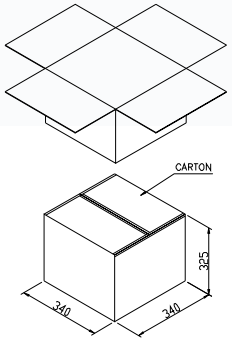

	REEL	CARTON
CONNECTOR (PCS)	1000	10000

TOLERANCE		NAME(INTENDED USE) CUSTOMER DRAWING	CMTDDZ 东莞市田都科技有限公司 Dongguan TianDu Technology Co. Ltd.
X.X ±0.30	X.° ±10°	PART NO.	TITLE: TYPE-C 3PIN-板上全插DIP
.XX ±0.20	.X° ± 8°		
.XXX ±0.10	.XX° ± 5°	DESIGN: ERIC	DRAWG NO.
UNITS	mm	CHED:	SCALE 1:1 / SHEET 2/2 / REV. V0
MATERILA		APPD:	
FINISH			