REV.	ECN NO OR DESCRIPTION	REVISED	DATE

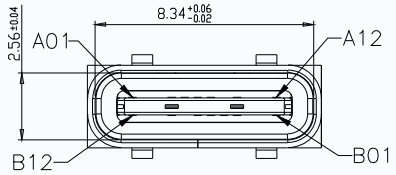

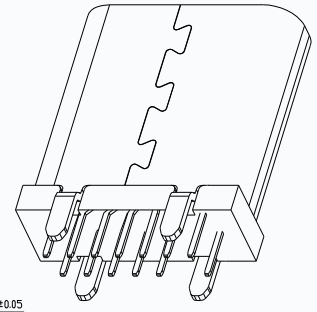

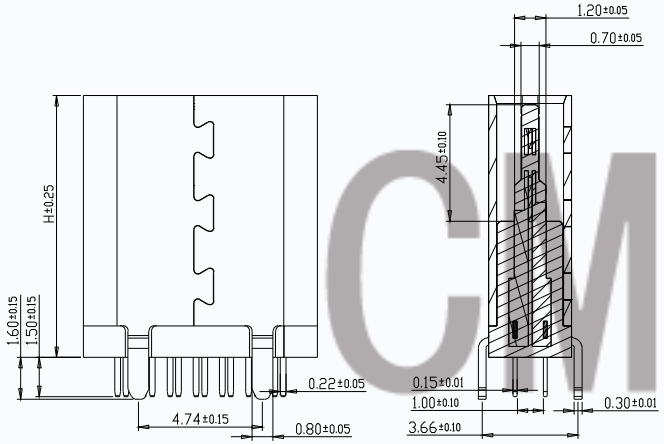

截面 1-1

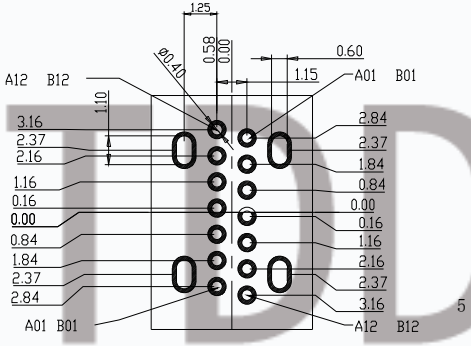

RECOMMENDED P.C.B. LAYOUT (T:1.00mm)

TOLERANCE UNSPECIFIED ±0.05mm

规格说明: Specifications:

电气特性: Electrical:

1. 额定电流: Current Rating 3.0A/contact
2. 额定电压: Voltage Rating 30V DC
3. 接触阻抗: Contact Resistance 30 milliohm
4. 耐电压: Dielectnic Withstanding 500 V AC AT Sea Levol
5. 绝缘阻抗: Lnsulation Resistance: 1.0 MEG

原材料: Matorial:

1. 塑胶: Hing Temperature Tnerma
2. 端子: Contact: 7025
3. 外壳: Shell: SUS304

电镀: Finish:

1. 端子: Contact: Piated Gold in Tin On Solder Talls

端子四周镀50U″(MIN)锡, 镀金区域镀金3U″

2. 外壳: 外壳四周镀8:0U″(MIN)锡 Nickel
3. 插拔力要求:

插头与连接器经正常插拔10次, 插头每次插入力不大于35N, 拔出力在10-25N之间, 做完寿命后插入力度不大于35N, 拔出力度大于8N;

4. 机械寿命: 10000次;

Mechanical Life: 10000 Cycles;

5. 盐雾试验:

温度: 35±2℃ 盐水浓度: 5%±1, PH值: 6.5~7.2

端子镀金区48H, 镍镍区48H, 镀锡区8~24H.

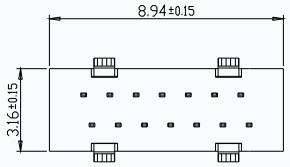

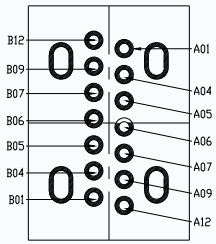

H= MM			
8.20	9.30	10.00	10.50

NO.	DESCRIPTION	MATERIAL	REMARKS	QTY
6	SHELL	STAINLESS STEEL	NI Plated	1PCS
5	SHIELDING PLATE	STAINLESS STEEL	---	1PCS
4	MD	HIGH TEMPERATURE PLASTIC	BLACK	1PCS
3	CONTACT	COPPER ALLOY	Au/NI Plated	1SET
2	CONTACT	COPPER ALLOY	Au/NI Plated	1SET
1	HOUSING	HIGH TEMPERATURE PLASTIC	BLACK	1PCS

PIN	SIGNAL NAME	PIN	SIGNAL NAME
A1	GND	B12	GND
A4	VBUS	B9	VBUS
A5	CC1		
A6	DP1	B7	DN2
A7	DN1	B6	DP2
		B5	CC2
A9	VBUS	B4	VBUS
A12	GND	B1	GND

UNLESS OTHERWISE SPECIFED TOLERANCES

DECIMALS:		ANGLES:	
X	:±0.5	X	:±2°
X.X	:±0.10	X.X	:±1°
X.XX	:±0.05		
X.XXX	:±0.02		

CMTDDZ 东莞市田都科技有限公司 DONGGUAN TIANDU TECHNOLOGY CO.,LTD.

TITLE	TYPE-C 母 180度 14PIN插板			
DWN	DAVID	T11-14LC04-H		
CHKD	JEFF	SCALE:1:1	UNIT: mm	
APVD	ERIC	SIZE: A4	SHEET:1OF1	REV: A