HSF Compliant

REV.	ECN NO.	DESCRIPTION	DRAW	CHECK	APPD.	DATE
A4	ECN150924001	新增PBT蓝色2985C规格	Amanda			15-06-26
B0	ECN171215001	新增专用包规	Michael	JOHNNY	JOHNNY	17-12-13

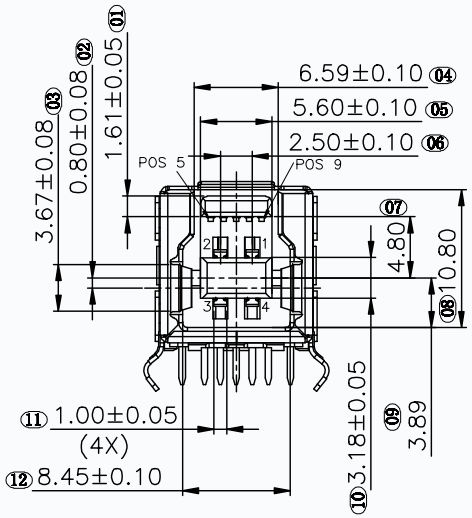

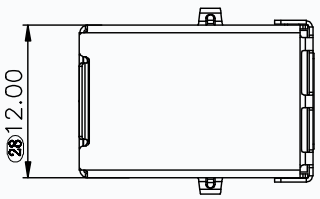

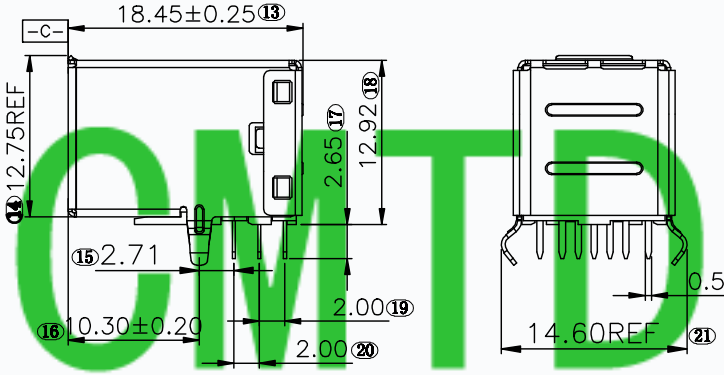

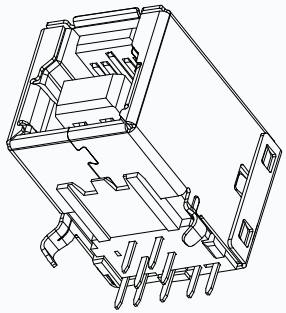

SPECIFCATIONS:
Contact current Rating:
1.8 Amperes for pin1&pin4.
0.25 Amperes other contacts
Dielectric Withstanding Voltage:AC 100V(RMS)
Insulation resistance:100Megohms Minimum.
Contact Resistance:
30mΩ Max for pin1&pin4
50mΩMax for other contacts
Mechanical Characteristics:
Mating Force:35 Newtoms.Maximum
Unmating Force:10 Newtoms.MInimum.
MATERIAL: 8N Min After Durability
Housing: PBT+30%GF 94V-0 COLOR:BLUE
Contact: copper alloy(T=0.25mm)
Shell: Brass
PLATING:
Contact: Au Plated on contact area
Tin Plated on solder area
Nickel underplating over all
Shell: Nickel Plated
operating Temperature:-55iãto+85iã

CMTDDZ

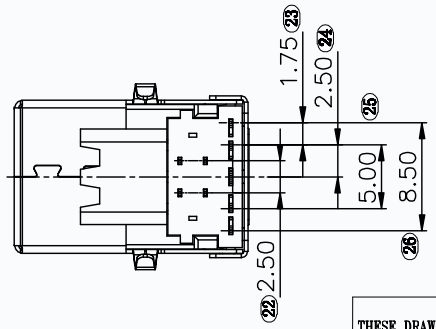

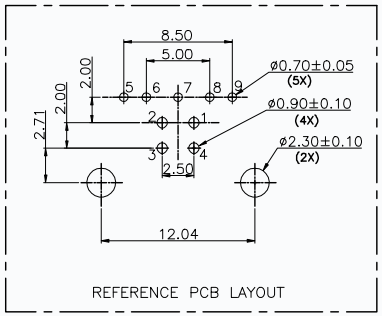

REFERENCE PCB LAYOUT

料号备注

A=PACK-T0076 B0

T10- 3 F 050 D XX X XX X X

12=半金雾锡1U"	00=PBT蓝 铜壳镀镍		
13=半金雾锡3U"	01=LCP蓝 铜壳镀镍		
14=半金雾锡5U"	02=PA9T蓝 铜壳镀镍		
15=半金雾锡15U"	03=PBT黑 铜壳镀镍		
16=半金雾锡30U"	04=PBT蓝 铁壳镀镍		
21=镍全金3U"	05=PBT蓝 铜壳镀金	R=ROHS2.0标准	
	06=PBT蓝2985C 铜壳镀镍	W=无卤+ROHS2.0	B=盐雾24H
	07=PA97蓝2985C 铜壳镀镍	H=REACH标准	C=盐雾48H

THESE DRAWINGS AND SPECIFICATIONS ARE THE PROPERTY OF DONGGUAN TIANDU ELECTRONICS CO.,LTD. AND SHALL NOT BE REPROOUCED. COPIED OR USED IN ANY MANNER WITHOUT THE PRIOR WRITTEN CENT OF DONGGUAN TIANDU ELECTRONICS CO., LTONSD

Pin Number	Signal Name	Pin Number	Signal Name
1	VBUS	5	StdB_SSTX-
2	D-	6	StdB_SSTX+
3	D+	7	GND_DRAIN
4	GND	8	StdB_SSRX-
Shell	Shield	9	StdB_SSRX+

东莞市田都电子有限公司
DONGGUAN SHI TIANDU ELECTRONIC CO.,LTD

UNLESS OTHERWISE SPECIFIED TOLERANCES

	METRIC
X. +/-	0.35
.X +/-	0.25
.XX +/-	0.25
FRACTIONS +/-	
ANGLES +/-	2.00°

DIMENSIONS (METRIC) (MM)

APPROVAL	日期
制图 Michael	2017.12.13
审核	
核准	
文件位置	

ANGLE OF PROJECTION

品名 规格	USB 3.0 BF 90° DIP (H=12.9)
料号	SEE TABLE
字张 A4	工程图号: TDU-USBBF-0616
版本	B0
比例	1 : 1
状态码	A
页数	1 OF 1