CAD FILE:

MODEL NO.	KNOB(G/VG)
T2-232014-G	(2~15)mm

RoHS Compliant

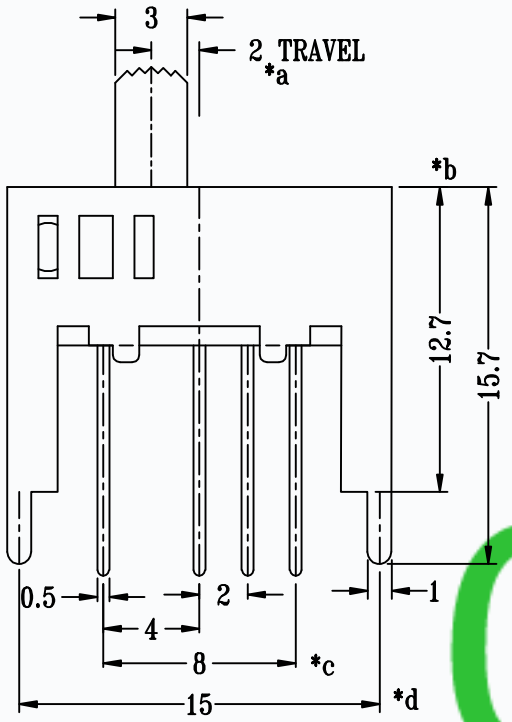

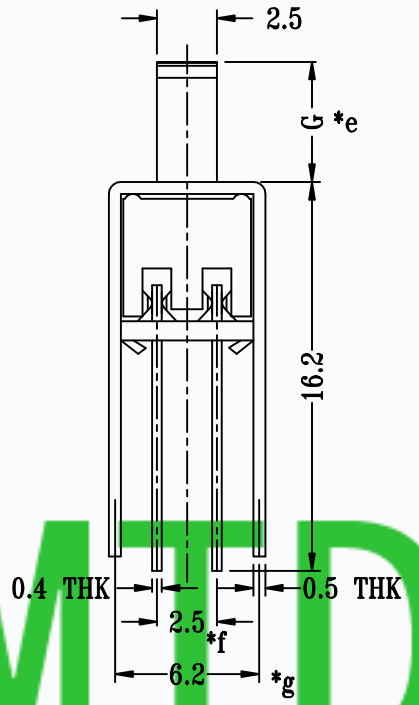

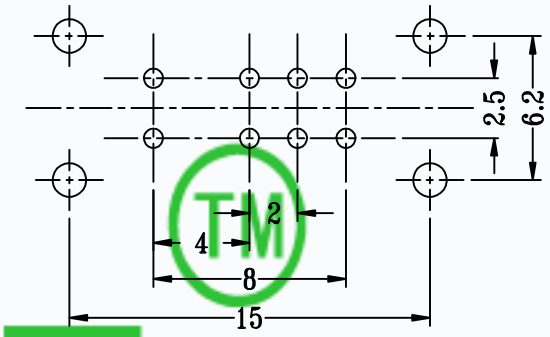

P.C.B LAYOUT
BOTTOM VIEW

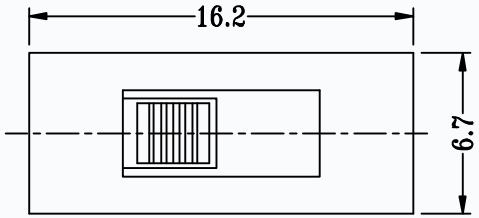

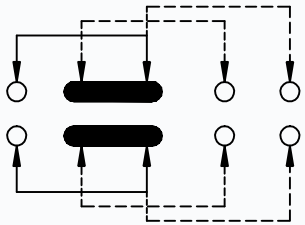

SCHEMATIC (SHORTING)

SPECIFICATIONS

Rating	0.3A 50V DC
CIRCUIT	2P3T
Timing	NON-SHORTING
Travel	2.0mm
Contact Resistance	< 100 mΩ
Operating Force	250gf ± 100gf
Operating Life	10.000 cycles

NO.	PARTS	MATERIALS	Q'TY	FINISH
8				
7	STEEL BALL	STEEL	1	NATURAL
6	SPRING	STEEL WIRE	1	NATURAL
5	CONTACT CLIP	PBS STRIP	2	Ag PLATED
4	TERMINAL	BRASS STRIP	8	Ag PLATED
3	BASE	PHENOLIC RESIN	1	NATURAL
2	FRAME	STEEL STRIP	1	NI PLATED
1	KNOB	POM	1	BLACK

TOLERANCE UNLESS SPECIFIED
WITHIN 1.5mm : ±0.1mm
OVER 1.5mm : ±0.2mm

THESE DRAWINGS AND SPECIFICATIONS ARE THE PROPERTY OF DONGGUAN TIANDU ELECTRONICS CO.,LTD. AND SHALL NOT BE REPROOUCED. COPIED OR USED IN ANY MANNER WITHOUT THE PRIOR WRITTEN CONSENT OF DONGGUAN TIANDU ELECTRONICS CO., LTD

DESCRIPTIONS OF REVISION	APPD.

TITLE : VERTICAL SLIDE SWITCH | UNIT : mm | DRWG NO.: CMTDDZ-T2-232014-00

MODEL: T2-232014-G | SCALE: 3:1

CMTDDZ 东莞市田都电子有限公司
DONGGUAN TIANDU ELECTRONICS CO.,LTD.

DWN.	ERIC	2013-6-17
CHK'D	MAIKO	2013-6-17
APPD.	Coco	2013-6-17

CMTDDZ